46700

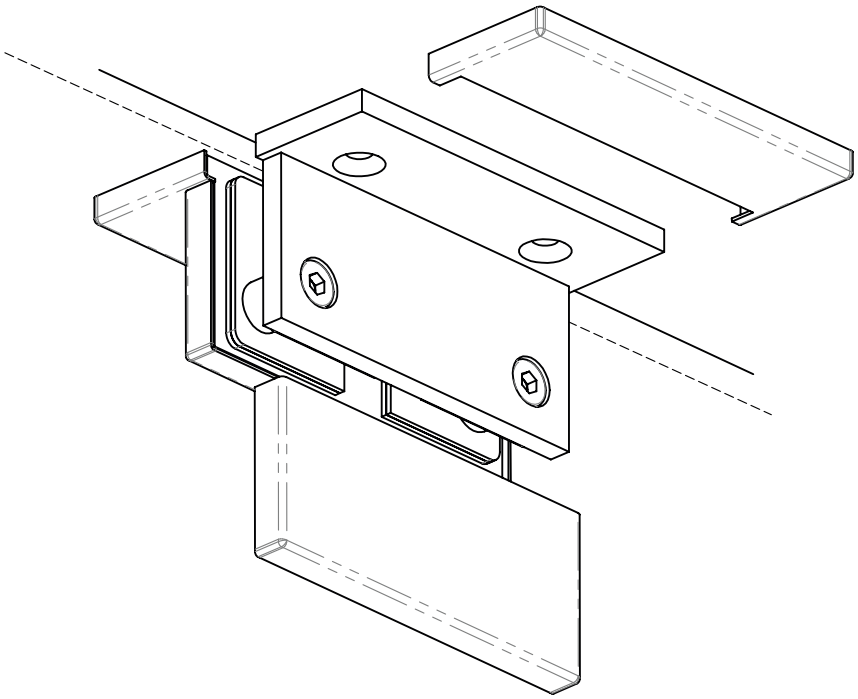

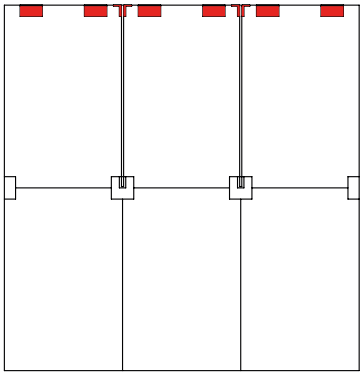

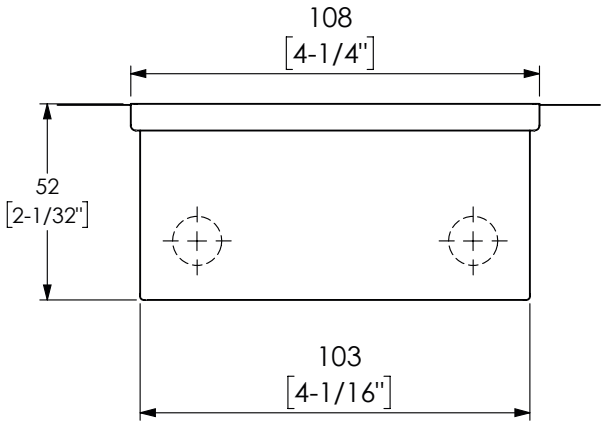
108
[4-1/4"]
52
[2-1/32"]
103
[4-1/16"]

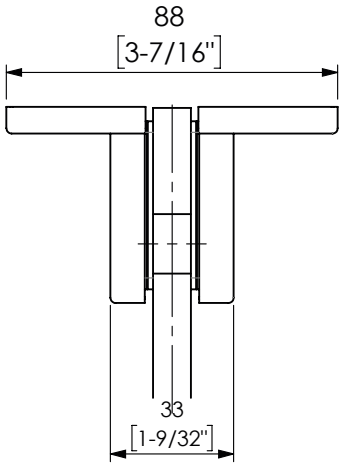
88
[3-7/16"]
33
[1-9/32"]

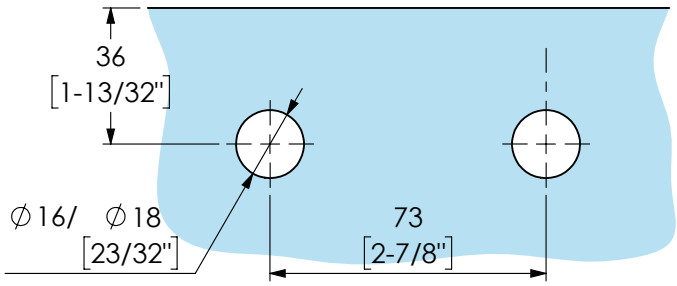
36
[1-13/32"]
∅16/ ∅18
[23/32"]
73
[2-7/8"]

T4.06