46500

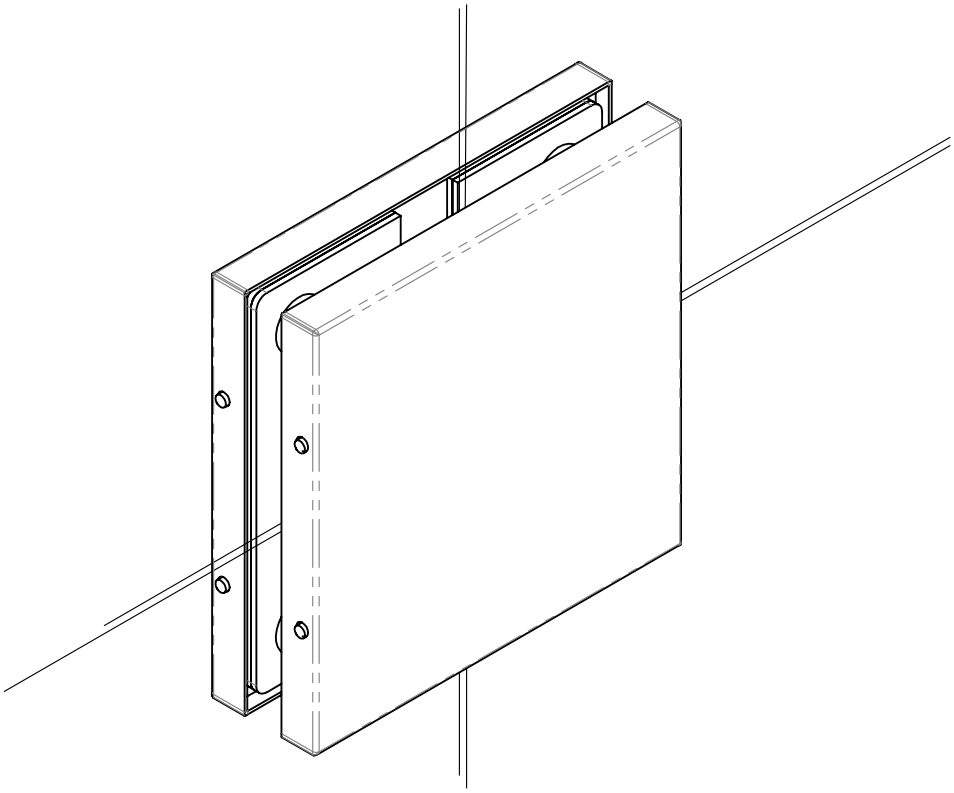

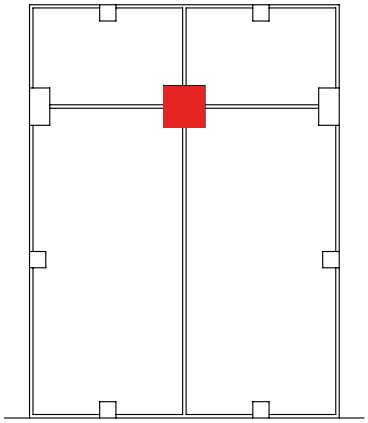

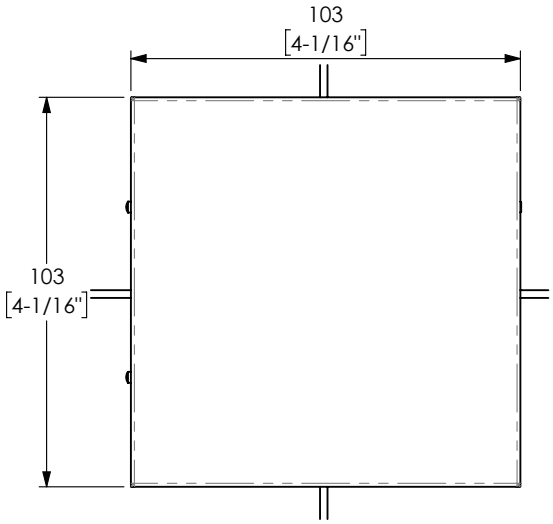
103
[4-1/16"]
103
[4-1/16"]
73÷75
[2" 7/8-2 29/32"]

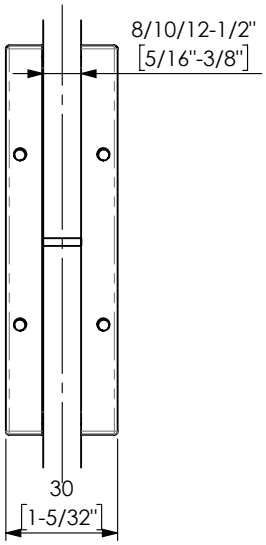
8/10/12-1/2"
[5/16"-3/8"]
30
[1-5/32"]

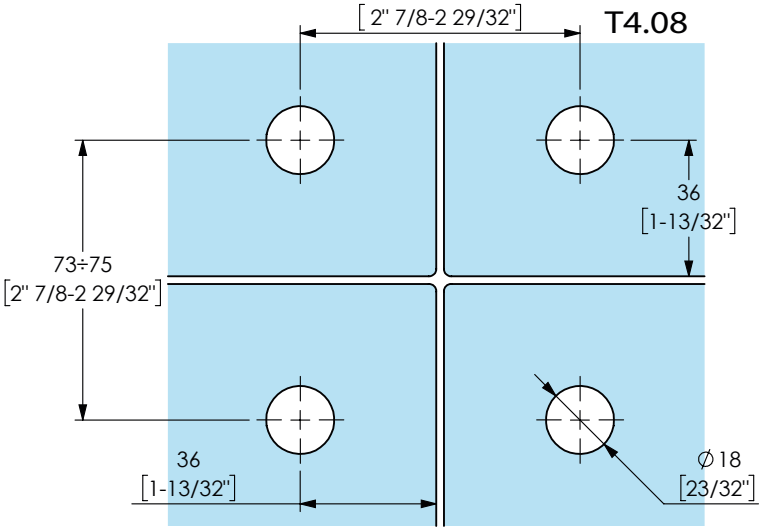
T4.08
73÷75
[2" 7/8-2 29/32"]
36
[1-13/32"]
36
[1-13/32"]
∅18
[23/32"]