41881

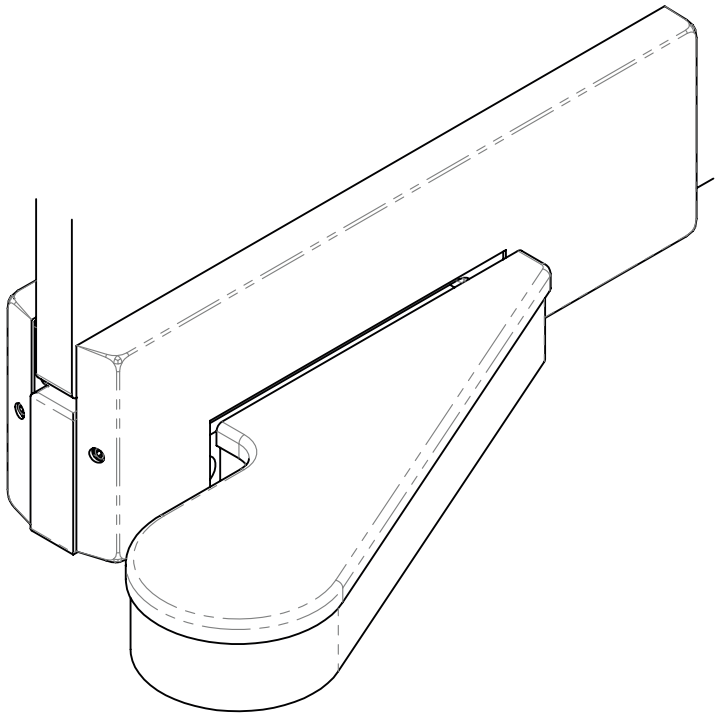

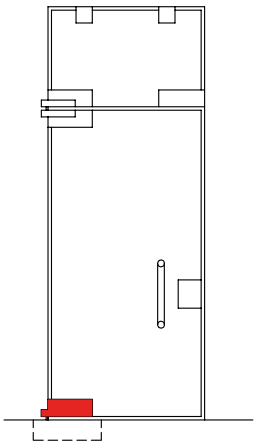

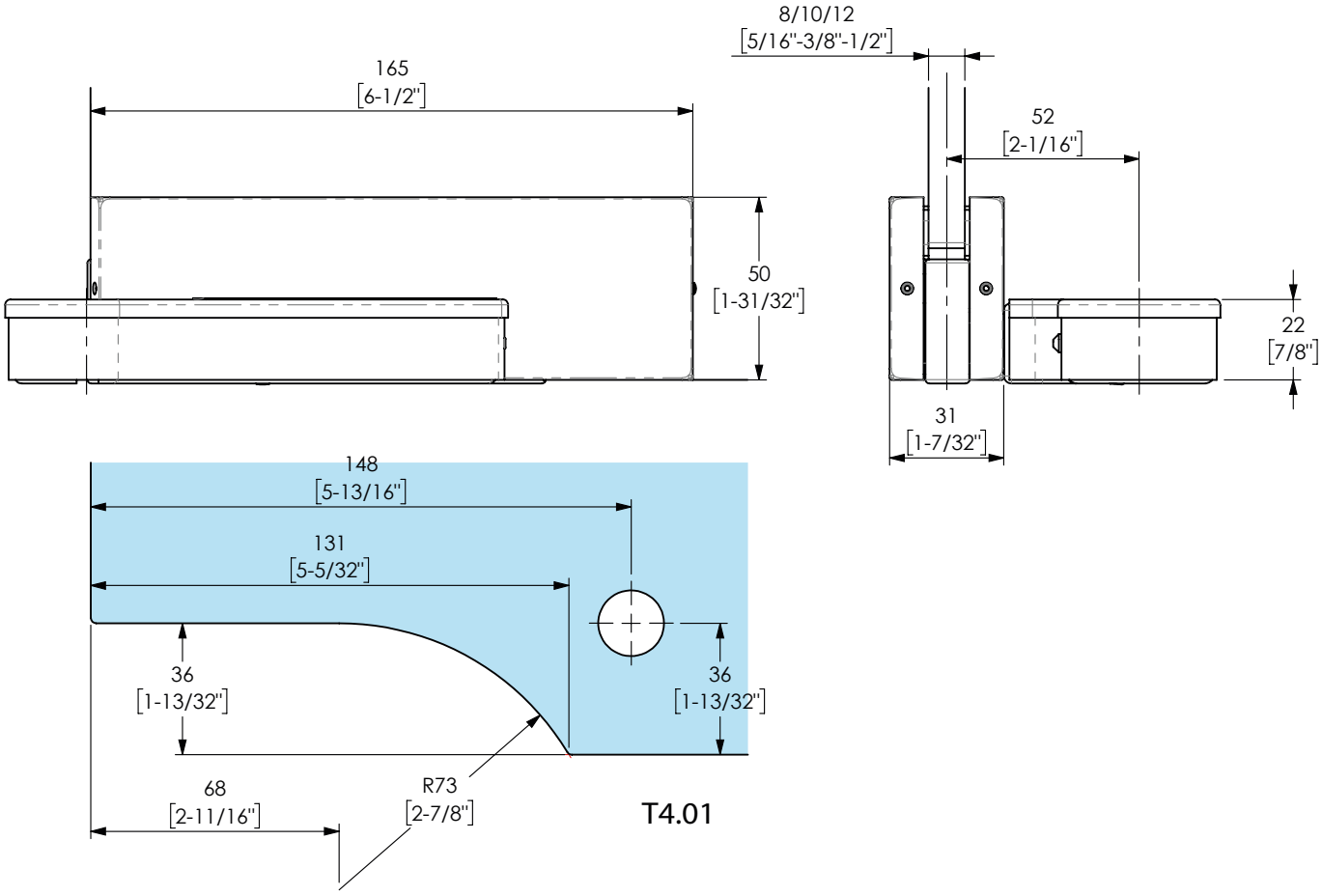
165
[6-1/2"]
50
[1-31/32"]
8/10/12
[5/16"-3/8"-1/2"]
52
[2-1/16"]
22
[7/8"]
31
[1-7/32"]
148
[5-13/16"]
131
[5-5/32"]
36
[1-13/32"]
36
[1-13/32"]
68
[2-11/16"]
R73
[2-7/8"]
T4.01