15102

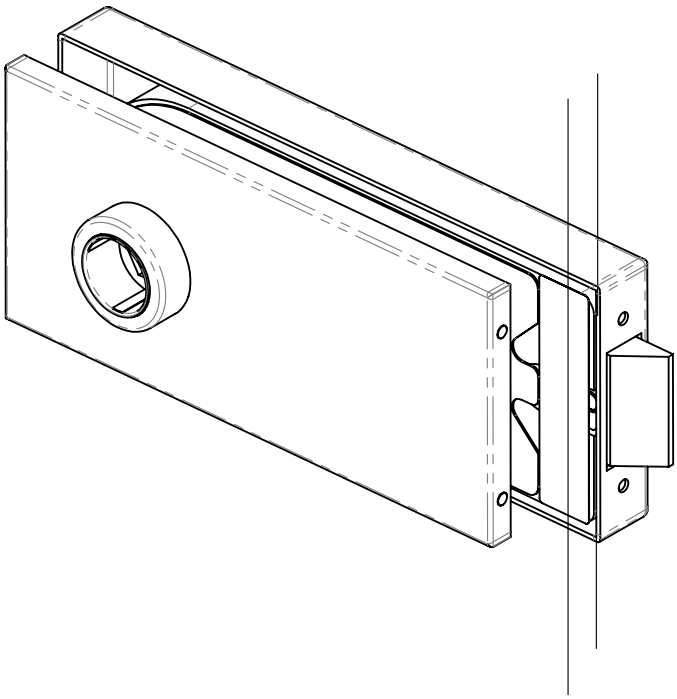

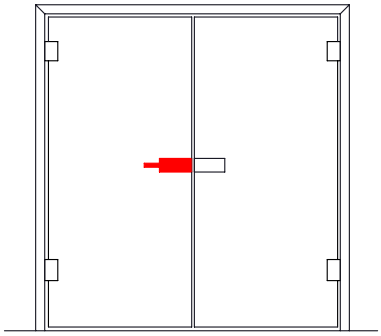

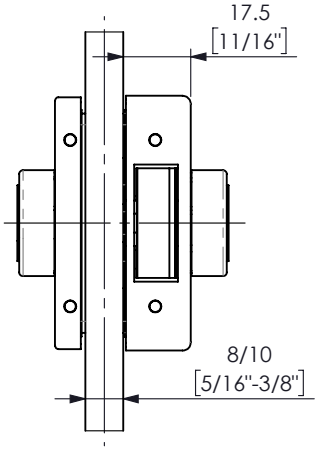
17.5
[11/16"]
8/10
[5/16"-3/8"]

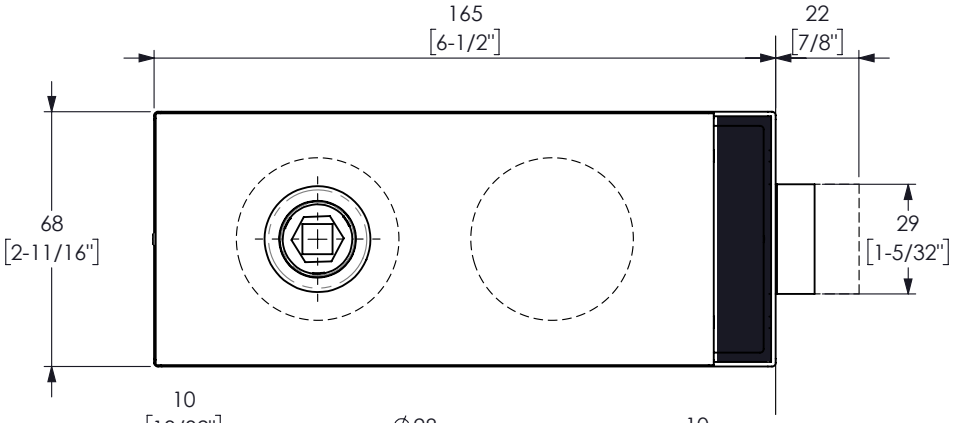
165
[6-1/2"]
22
[7/8"]
68
[2-11/16"]
29
[1-5/32"]

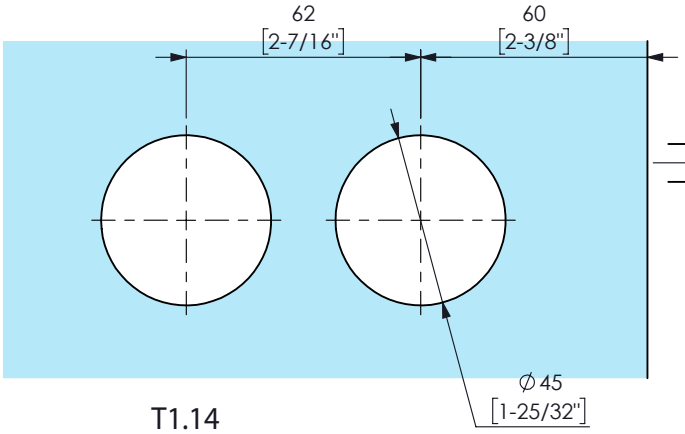
62
[2-7/16"]
60
[2-3/8"]
Ø45
[1-25/32"]

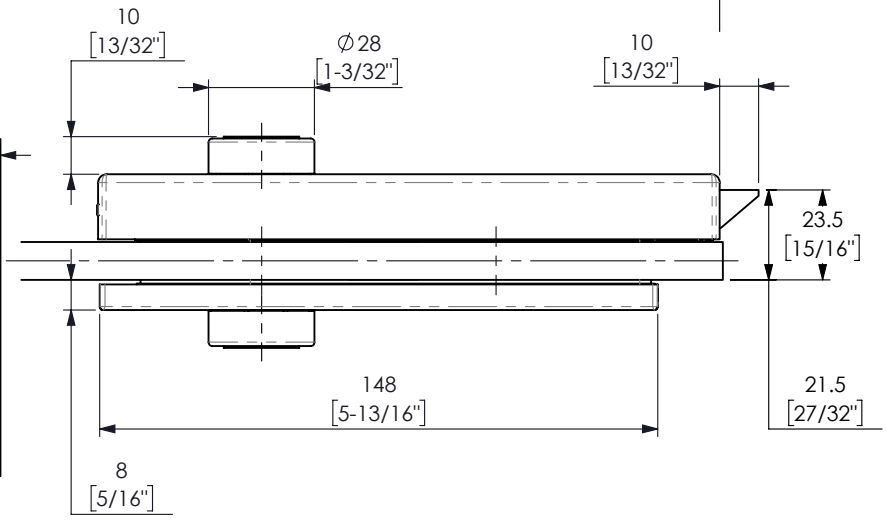
10
[13/32"]
Ø28
[1-3/32"]
10
[13/32"]
23.5
[15/16"]
148
[5-13/16"]
21.5
[27/32"]
8
[5/16"]

T1.14